Modified Flywheel Rowing Machine with Mechanically Powered Seat

Designers: Byron Tottaram, John Wee and Bryan Raineri
Supervising Professor: Dr. Yu Zhou
Department of Mechanical Engineering
State University of New York at Stony Brook
Stony Brook, NY 11794-2300

Figure 5. Prototype of Rowing Machine

INTRODUCTION

The commercial flywheel rowing machines currently used in rehabilitation are designed for individuals who have the full use of their legs and feet. By pushing or contracting the legs with the feet firmly placed on a kick-stand, a user is able to exercise on a moving seat that brings him/her closer to or further away from the flywheel mechanism of the rowing machine. Pulling the flywheel resistance ropes helps to supplement the "rowing" motion of the body. However, with existing rowing machines, it is impossible for paraplegics who possess partial limbs or individuals with weak leg limbs, who are in need of rehabilitation, to exercise. Therefore, it is necessary to modify the existing flywheel technology so that it can be better suited for use by those individuals. This project designs a modified flywheel rowing machine with a mechanically powered seat for rehabilitation, in order to compensate for the natural motion of pushing one's feet against the kick-stand of the flywheel.

SUMMARY OF IMPACT

A flywheel rowing machine provides a good exercise tool for both a cardiovascular workout and strength training for lower limbs. In particular, the modified flywheel machine will be of great use to assist those who are in need of rehabilitating injured or weak leg muscles. Positive feedback has been received from an on-campus marketing survey.

TECHNICAL DESCRIPTION

The modified flywheel rowing machine in this project consists of three main subsystems: (1) a pulley system (of four pulleys) that is connected along the flywheel track; (2) an extendable rod spring-system that is situated at the back of the seat; and (3) a cable system that provides a connection between the pulley system and extendable rod. Other components include: (1) a lab jack for adjusting the length of the spring system along the flywheel track; (2) a spring fixture that connects the seat to the extendable rod system; and (3) an aluminum plate that is fixed under the seat to stabilize the seat and prevent it from tilting as it traverses along the flywheel track.

As the user pulls upon the ropes of the flywheel device with arms and hands, the pulley system will activate and reel in the flywheel cable - which is also connected to the extendable rod spring system. As the pulley is reeled in, the extendable rod will compress, and will drive the seat of the flywheel backward. Conversely, when the user relaxes their arms, the cable of the pulley system will slacken, and reduce the compressive force that is imposed on the extendable rod. The slackening of the cable will then cause the rod to extend outward and drive the seat forward.

The cost of the parts and supplies for this project was about $700.

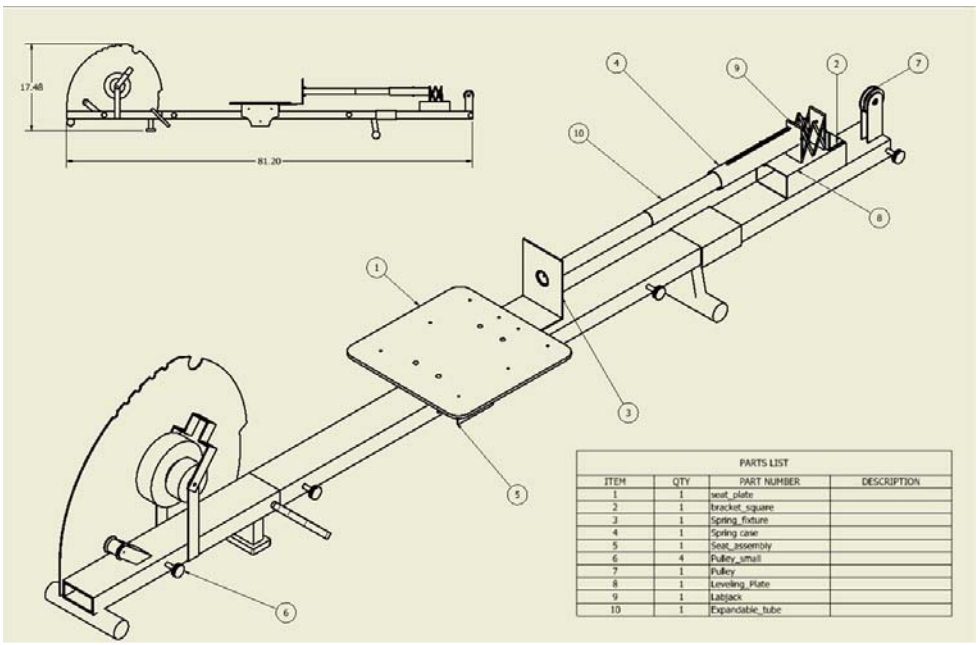

Figure 6. CAD Drawing of Modified Flywheel Rowing Machine